EE357 – Communication Systems

Laboratory Session 2 – Frequency Modulation

Objective Investigate frequency modulation

Apparatus

- Mixed Domain Oscilloscope (Tektronix MDO3014)
- Function Generator F_1 – OWON AG 051 (for message signal)
- Function Generator F_2 – RIGOL DG811 (for VCO)

Theory

Frequency Modulation

FM signal can be mathematically represented as,

$$x_{FM}(t) = A_c \cos\left[\omega_c t + 2\pi k_f \int_0^t x_m(\tau)\, d\tau\right]. \tag{1}$$

For single-tone modulation with $x_m(t) = A_m \cos(\omega_m t)$,

$$\begin{aligned} x_{FM}(t) &= A_c \cos\left[\omega_c t + 2\pi k_f A_m \int_0^t \cos(\omega_m \tau)\, d\tau\right] \\ &= A_c \cos\left[\omega_c t + 2\pi \Delta f \int_0^t \cos(\omega_m \tau)\, d\tau\right] \qquad (k_f A_m \stackrel{\text{def}}{=} \Delta f) \\ &= A_c \cos\left[\omega_c t + \frac{2\pi \Delta f}{\omega_m}(\sin(\omega_m t) - 0)\right] \\ &= A_c \cos[\omega_c t + \beta \sin(\omega_m t)] \qquad \left(\beta \stackrel{\text{def}}{=} k_f A_m / f_m\right) \end{aligned} \tag{2}$$

Here,

k_f	=	Sensitivity of the function generator
$x_m(t)$	=	Modulating signal (message signal)
Δf	=	Peak frequency deviation
β	=	Modulation index

Note that the argument of the cosine function in (2) comprises of a sine function within it. Using the definitions and properties of the Bessel Function of the First Kind $J_\alpha(x)$ (order α), it can be shown that (2) simplifies to,

$$x_{FM}(t) = A_c \sum_{n=-\infty}^{\infty} J_n(\beta) \cos[(\omega_c + n\omega_m)t]. \tag{3}$$

By using Fourier Transform on (3), we can obtain the frequency domain representation of the FM signal:

$$X_{FM}(f) = \frac{A_c}{2} \sum_{n=-\infty}^{\infty} J_n(\beta) \cdot \{\delta[f + (f_c + nf_m)] + \delta[f - (f_c + nf_m)]\}. \tag{4}$$

Total Average Power

Total average power of a single-tone FM signal is given by:

$$P_{\text{avg}} = S_T = \sum_{n=-\infty}^{\infty} \frac{1}{2} A_c^2 J_n^2(\beta). \tag{5}$$

Bandwidth (BW)

The instantaneous frequency of an FM signal is given by:

$$f_{\text{inst}} = f_c + k_f x_m(t). \tag{6}$$

According to Carson's rule, bandwidth of an FM signal can be approximated as:

$$BW = 2f_m(\beta + 1). \tag{7}$$

Frequency spectrum of the FM signal which corresponds to a specific message signal can be changed by changing the β value. As $\beta = k_f A_m / f_m$, by changing A_m, frequency spectrum of the FM signal is changed.

Sensitivity of the function generator

In this experiment, we will be using a function generator as a voltage-controlled oscillator (VCO) (F_2) to generate an FM signal as shown in Figure 1.

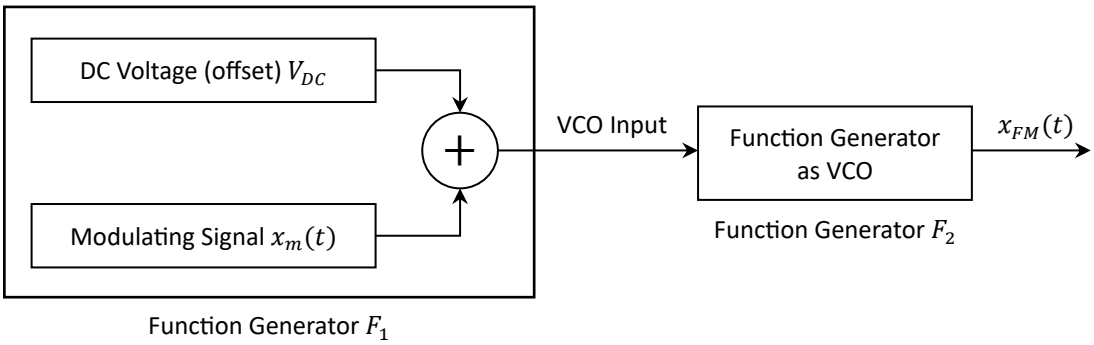

Figure 1: Modulator

The **sensitivity** of the function generator is usually a function generator specific parameter (constant). In other cases, the sensitivity may be adjustable. In this practical, we will be using a function generator whose sensitivity can be changed. Anyhow, it is a good idea to explore the effect of k_f of the VCO before proceeding.

k_f can be calculated by feeding known DC signals as VCO inputs and then analysing the VCO output signal frequency.

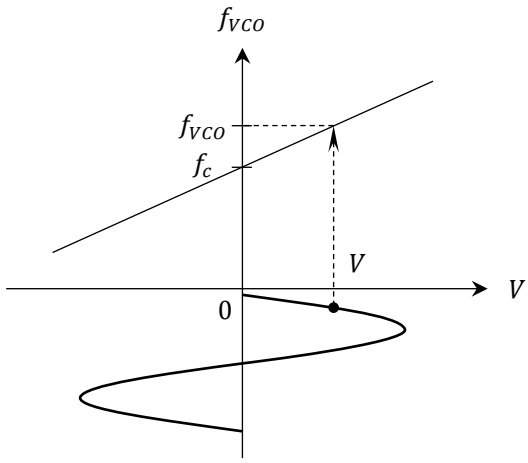

Figure 2: Variation of VCO frequency with voltage

The frequency of the VCO output signal can be written as,

$$\begin{aligned} f_{VCO} &= k_f V + f_c \\ y &= m\,x + c \end{aligned} \tag{8}$$

Therefore, from (8), the sensitivity of the VCO can be obtained from the gradient m of the plot of f_{VCO} vs. V as illustrated in Figure 2.

Procedure

Part 1: Determination of the Sensitivity of the Function Generator

1. Connect the circuit as shown in Figure 1 with no modulating signal ($x_m(t) = 0$). Keep V_{DC} at zero initially. Connect the output of the VCO to the mixed-domain oscilloscope (MDO) to observe the frequency spectrum.
2. Adjust the free-running frequency of the VCO to be $f_c = 1\ \mathrm{MHz}$ and its output amplitude to $A_c = 400\ \mathrm{mV}$. Then, select FM mode, and set the frequency deviation setting to $\Delta f' = 50\ \mathrm{kHz}$.
3. Change V_{DC} in steps of $0.5\ \mathrm{V}$ from $-3\ \mathrm{V}$ to $+3\ \mathrm{V}$ and observe the variation of carrier frequency using the MDO. Record your observations in a table. Identify the region where the frequency is varying linearly with respect to voltage.
4. By drawing a plot of carrier frequency f_c vs. DC voltage V_{DC} on a graph sheet, determine the sensitivity k_f of the VCO in $\mathrm{kHz/V}$.

Part 2: Generation of an FM signal

1. Connect the circuit as shown in Figure 1 with no DC voltage applied ($V_{DC} = 0$).
2. Keep f_c, A_c, and $\Delta f'$ unaltered from Part 1.

3. Generate a sinusoidal message signal $x_m(t)$ with $f_m = 10\ \text{kHz}$, and $A_m = 500\ \text{mV}$.
4. Observe the FM signal through the MDO in time and frequency domains.

Part 3: Different frequency spectra for the same message signal

1. Continuing from Part 2, use the given Bessel table and plot and/or the prelab exercises to calculate the desired A_m values that has to be set in order to get the following FM signal frequency spectra:
    a. Carrier only
    b. Only the carrier and the 1st sideband pair are visible
    c. Only the carrier, 1st sideband pair, and the 2nd sideband pair are visible
    d. Only the carrier, 1st sideband pair, 2nd sideband pair, and the 3rd sideband pair are visible
    e. Suppressed carrier
    f. Suppressed 1st sideband pair
    g. Suppressed 2nd sideband pair

    Hint: Use the equation $\beta = k_f A_m / f_m$.
2. Obtain the above cases by varying A_m and observing the frequency spectrum of the FM signal through the MDO. Record the practical values of $A_m{}'$ and calculate the modulation index β' for each case.
3. Compare the β values determined in the prelab (theoretical, β) with those calculated using the observations (practical, β'), by marking the two sets of values in the given Bessel plot.

Part 4: Effect of f_m on the frequency spectrum

- For the case $\beta = 4$, change f_m and observe its effect on the frequency spectrum of the FM signals. Verify Carson's rule for each case of f_m.

Discussion

1. Explain why FM is better than AM in terms of resistance to noise.
2. Describe two methods to estimate the occupied bandwidth of an FM signal.
3. Describe the key features of spectrum allocation used for typical FM radio broadcasting.
4. Compare the performance of FM and AM on the frequency spectrum.

References

[1] L. W. Couch, Digital and Analog Communication Systems, 8 ed., Harlow, Essex: Pearson, 2013, pp. 331-341.

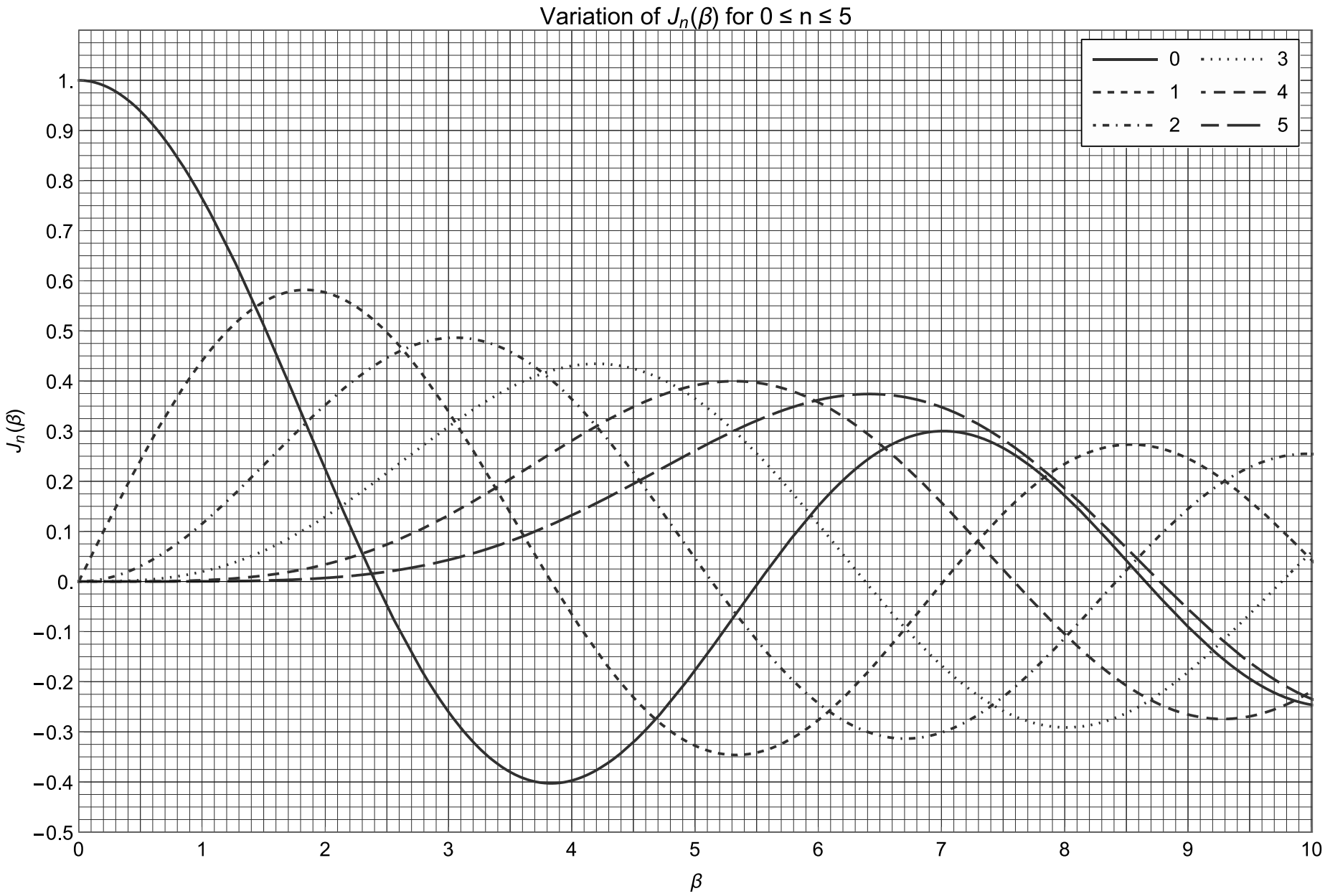
Variation of $J_n(\beta)$ for 0 ≤ n ≤ 5
0
1
2
3
4
5
$J_n(\beta)$
β
1.
0.9
0.8
0.7
0.6
0.5
0.4
0.3
0.2
0.1
0.
−0.1
−0.2
−0.3
−0.4
−0.5
0
1
2
3
4
5
6
7
8
9
10

Table 1: Bessel Table

Mod. Index β	Sideband Amplitude															
	Carrier	**1**	**2**	**3**	**4**	**5**	**6**	**7**	**8**	**9**	**10**	**11**	**12**	**13**	**14**	**15**
0.0000	1.00000	0	0	0	0	0	0	0	0	0	0	0	0	0	0	0
0.2500	0.98444	0.12403	0.00777	0.00032	0	0	0	0	0	0	0	0	0	0	0	0
0.5000	0.93847	0.24227	0.03060	0.00256	0.00016	0	0	0	0	0	0	0	0	0	0	0
0.7500	0.86424	0.34924	0.06707	0.00848	0.00080	0	0	0	0	0	0	0	0	0	0	0
1.0000	0.76520	0.44005	0.11490	0.01956	0.00248	0.00025	0	0	0	0	0	0	0	0	0	0
1.5000	0.51183	0.55794	0.23209	0.06096	0.01177	0.00180	0.00023	0	0	0	0	0	0	0	0	0
2.0000	0.22389	0.57672	0.35283	0.12894	0.03400	0.00704	0.00120	0.00017	0	0	0	0	0	0	0	0
2.5000	-0.04838	0.49709	0.44606	0.21660	0.07378	0.01950	0.00422	0.00078	0.00012	0	0	0	0	0	0	0
3.0000	-0.26005	0.33906	0.48609	0.30906	0.13203	0.04303	0.01139	0.00255	0.00049	0	0	0	0	0	0	0
3.5000	-0.38013	0.13738	0.45863	0.38677	0.20441	0.08044	0.02543	0.00674	0.00154	0.00031	0	0	0	0	0	0
4.0000	-0.39715	-0.06604	0.36413	0.43017	0.28113	0.13209	0.04909	0.01518	0.00403	0.00094	0.00020	0	0	0	0	0
4.5000	-0.32054	-0.23106	0.21785	0.42470	0.34842	0.19471	0.08428	0.03002	0.00913	0.00242	0.00057	0.00012	0	0	0	0
5.0000	-0.17760	-0.32758	0.04657	0.36483	0.39123	0.26114	0.13105	0.05338	0.01841	0.00552	0.00147	0.00035	0	0	0	0
5.5000	-0.00684	-0.34144	-0.11732	0.25612	0.39672	0.32092	0.18678	0.08660	0.03366	0.01131	0.00336	0.00089	0.00022	0	0	0
6.0000	0.15065	-0.27668	-0.24287	0.11477	0.35764	0.36209	0.24584	0.12959	0.05653	0.02117	0.00696	0.00205	0.00055	0.00013	0	0
6.5000	0.26009	-0.15384	-0.30743	-0.03535	0.27480	0.37357	0.29991	0.18012	0.08804	0.03659	0.01329	0.00430	0.00125	0.00033	0	0
7.0000	0.30008	-0.00468	-0.30142	-0.16756	0.15780	0.34790	0.33920	0.23358	0.12797	0.05892	0.02354	0.00833	0.00266	0.00077	0.00021	0
7.5000	0.26634	0.13525	-0.23027	-0.25806	0.02382	0.28347	0.35414	0.28315	0.17441	0.08892	0.03900	0.01508	0.00523	0.00164	0.00047	0.00013
8.0000	0.17165	0.23463	-0.11299	-0.29113	-0.10535	0.18578	0.33757	0.32058	0.22345	0.12632	0.06077	0.02560	0.00962	0.00327	0.00102	0.00029
8.5000	0.04194	0.27312	0.02232	-0.26261	-0.20770	0.06713	0.28667	0.33758	0.26935	0.16943	0.08943	0.04100	0.01669	0.00613	0.00205	0.00063
9.0000	-0.09033	0.24531	0.14485	-0.18093	-0.26547	-0.05504	0.20431	0.32746	0.30506	0.21488	0.12469	0.06222	0.02739	0.01083	0.00389	0.00129
9.5000	-0.19393	0.16126	0.22788	-0.06531	-0.26913	-0.16132	0.09932	0.28677	0.32330	0.25773	0.16503	0.08970	0.04269	0.01816	0.00700	0.00247
10.0000	-0.24594	0.04347	0.25463	0.05838	-0.21960	-0.23406	-0.01446	0.21671	0.31785	0.29186	0.20749	0.12312	0.06337	0.02897	0.01196	0.00451
10.5000	-0.23665	-0.07885	0.22163	0.16328	-0.12833	-0.26105	-0.12029	0.12357	0.28506	0.31080	0.24774	0.16109	0.08978	0.04413	0.01949	0.00783
11.0000	-0.17119	-0.17678	0.13905	0.22735	-0.01504	-0.23829	-0.20158	0.01838	0.22497	0.30885	0.28043	0.20101	0.12160	0.06429	0.03037	0.01301
11.5000	-0.06765	-0.22838	0.02794	0.23809	0.09629	-0.17111	-0.24508	-0.08462	0.14206	0.28227	0.29976	0.23905	0.15755	0.08975	0.04536	0.02070
12.0000	0.04769	-0.22345	-0.08493	0.19514	0.18250	-0.07347	-0.24372	-0.17025	0.04510	0.23038	0.30048	0.27041	0.19528	0.12015	0.06504	0.03161
12.5000	0.14688	-0.16548	-0.17336	0.11001	0.22617	0.03474	-0.19837	-0.22518	-0.05382	0.15628	0.27887	0.28991	0.23137	0.15432	0.08962	0.04643